ARIS
Stellantriebe

nano

Electrical Rotary Drive

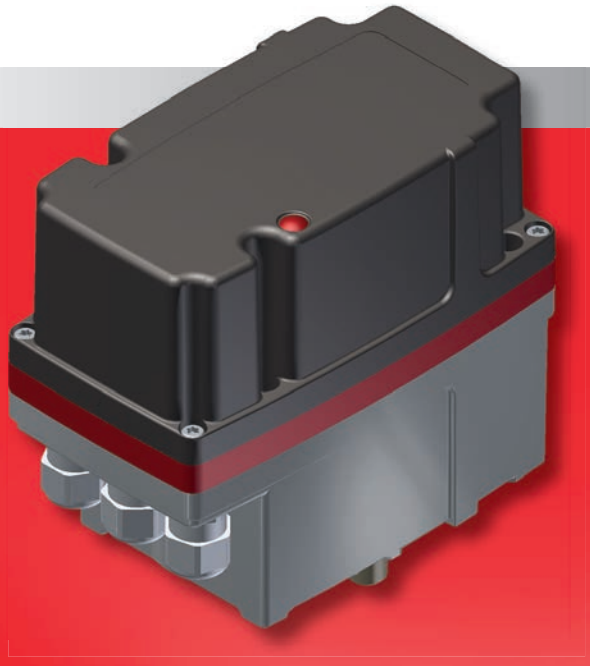

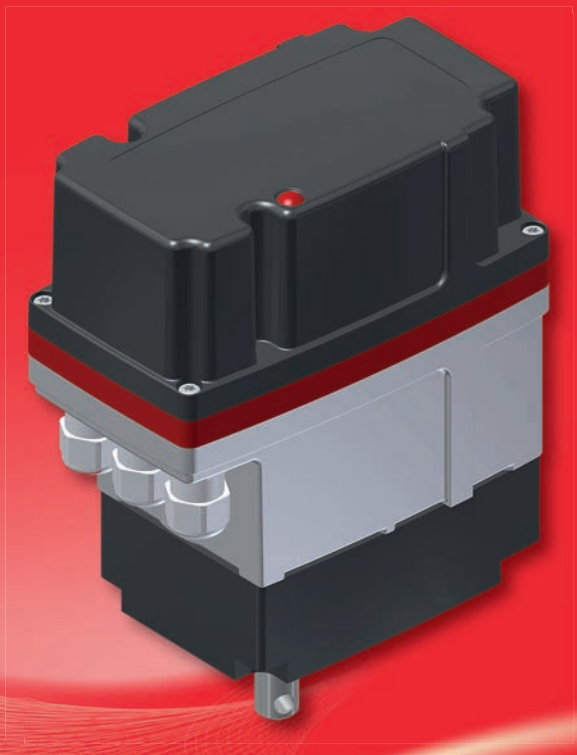

nano

Synchronous motor technology (AC) or direct current motor (DC)

- The permanent magnets built into the synchronous motor ensure a high holding torque even in a de-energized condition. (AC)
- The motor speed depends solely on the voltage frequency. Therefore a constant and load-free actuating time is ensured.

Classic shut-off system via switching cams and micro switches

- No voltage supply necessary for position indication and shut-off. Nano actuators are 100% connection compatible to ARIS actuators sold before 2014; perfectly suitable as exchange actuators.
- Tool-free adjustable aluminum switching cams allow a fast and exact actuator setup.

Mechanical data

- Robust aluminum body allows usage in rough industrial environment; high operational safety.
- Fiber-glass reinforced cover protects reliably all functional parts and serves as optimal isolation of the electric components; high operational safety.
- Captive cover screws allow a safe and easy attachment and screwing of the cover; short initial setup times.
- Variety of standard retaining bores, incl. ISO 5211, allow an easy adaption of nearly all valves without expensive mounting brackets.
- The compact design allows usage even in constricted spaces.
- Short delivery times of special adaptions by a special changeable shaft system.

Self-adjusting potentiometer

- Optional potentiometer allows a permanent feedback of the current actuator position.
- The potentiometer self-adjusts automatically to the path after setup via an integrated friction clutch.
- Several types allow an ideal utilization of the full potentiometer range:
  Nano S 90°/180°/320°, Nano M 30...40 Nm 10°...150°, Nano M 50...60 Nm 10°...100°.

Options

Cam shapes

- 330° / 180°

Mechanical position indicator

- Freely adjustable

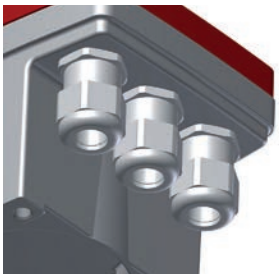

Connection set (option)

- 3x cable glands M16x1.5 (IP 65)

Options

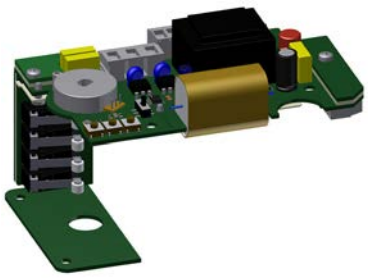

PMR-Nano (AC)

- Power supply: 230 V ±10%, 50/60 Hz
  Special voltages/frequencies available
- Nominal value input: 0 (4) upto 20 mA (DC), optional 0 (2) upto 10 V
  Burden 250 Ω, overload protection 25 mA
  Reverse voltage protection up to -25 mA
  Resolution 10 bit
- Actual value output: Fixed limits: 0 or 4-20 mA (Option 0 or 2-10 V)
  Current sink, burden max. 500 Ω
  Resolution 10 bit

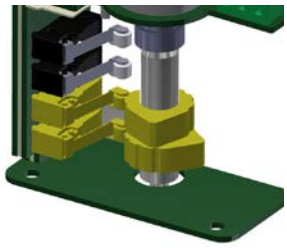

Two additional auxiliary switches

- Adjustment via tool-free switching cams
- Various cam shapes allow different functions of the auxiliary switches

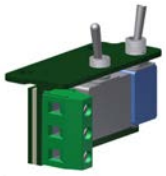

Service switch (Standard with DC)

- Manual/Automatic operation
- Left/Right hand rotation
- Integrated into the actuator

Current output (additional board)

- Position feedback 4–20 mA

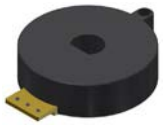

Potentiometer

- 1 kΩ/10 kΩ
- Resolution: Nano S 90°/180°/320°, Nano M 30...40 Nm 10°...150°,
  Nano M 50...60 Nm 10°...100°.

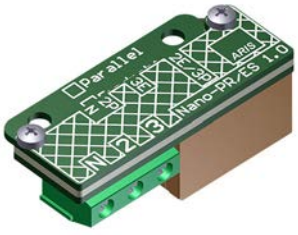

Parallel relay/Single-wire control (AC)

- AC relay
- Completely wired
- Operating voltage=Motor voltage
- Parallel operation of several actuators

Heater

- For heating the actuator´s interior to avoid water condensation

nano S

Type list

Type	AC Torque [Nm]	AC Time [s/90°]	Type	DC Torque [Nm]	DC Time [s/90°]
Nano S 05-03	5	3	**Nano S-DC 05-03**	5	3
Nano S 05-06	5	6	**Nano S-DC 05-06**	5	6
			Nano S-DC 05-10	5	10
Nano S 05-15	5	15	**Nano S-DC 05-15**	5	15
Nano S 05-30	5	30	**Nano S-DC 05-30**	5	30
			Nano S-DC 05-45	5	45
Nano S 05-60	5	60			
Nano S 10-03	10	3	**Nano S-DC 10-03**	10	3
Nano S 10-06	10	6	**Nano S-DC 10-06**	10	6
			Nano S-DC 10-10	10	10
Nano S 10-15	10	15	**Nano S-DC 10-15**	10	15
Nano S 10-30	10	30	**Nano S-DC 10-30**	10	30
			Nano S-DC 10-45	10	45
Nano S 10-60	10	60			
Nano S 15-06	15	6	**Nano S-DC 15-06**	15	6
			Nano S-DC 15-10	15	10
Nano S 15-15	15	15	**Nano S-DC 15-15**	15	15
Nano S 15-30	15	30	**Nano S-DC 15-30**	15	30
			Nano S-DC 15-45	15	45
Nano S 15-60	15	60			
Nano S 20-06	20	6	**Nano S-DC 20-06**	20	6
			Nano S-DC 20-10	20	10
Nano S 20-15	20	15	**Nano S-DC 20-15**	20	15
Nano S 20-30	20	30	**Nano S-DC 20-30**	20	30
			Nano S-DC 20-45	20	45
Nano S 20-60	20	60			

Other values upon request.

Specifications

	AC	DC
Motor	Synchronous motor, short circuit-proof	Direct current brush motor
Protection class	IP 65 (optional IP 66)	
Ambient temperature	–15 °C...+60 °C/optional -40 °C...+80 °C (mit PMR: 0 °C...+60 °C)	
Housing	Alu die cast (EN AC-44200) untreated	
Gear	Metal	
Cover	Polycarbonate	
Shaft	1.4021	
Position indicator	optional	
Power supply	230 V AC (optional 115 V AC/24 V AC)	24 V DC ±20%
Additional switches	2 pcs (optional)	
Potentiometer	optional	
Travel	10°...330°	
Duty cycle	100%	
Connection	3 cable entries M16x1.5	
Path cutoff	Switch cams/Micro switches	
Maintenance	Lifetime lubrication (maintenance free)	
Control	3-point-step	2-wire-system

Dimensions
Nano S

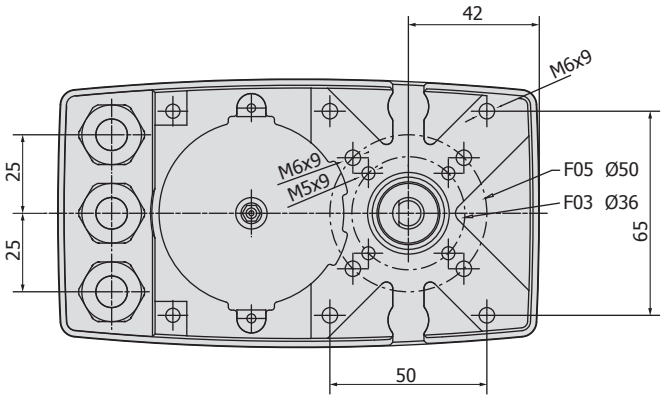

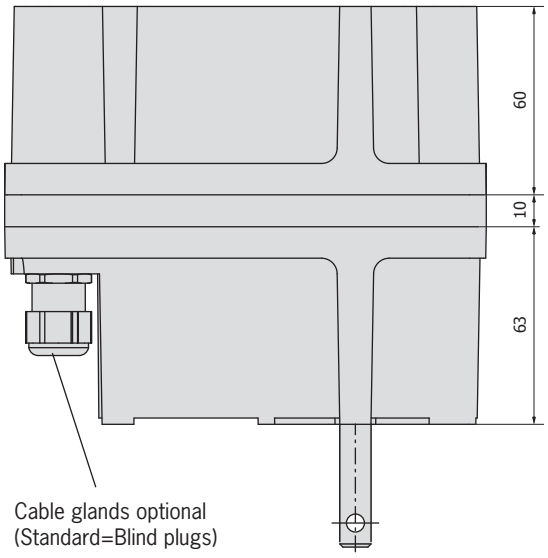

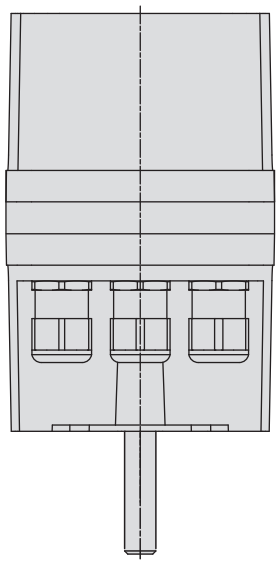

Round shaft
with cross hole
(Standard)

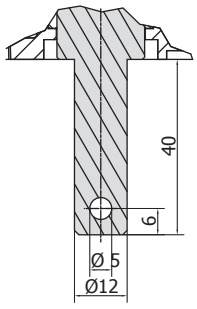

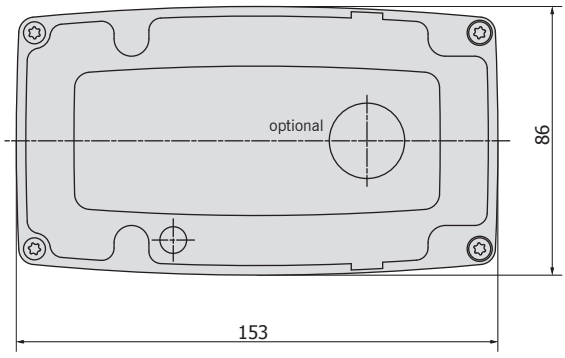

ISO shaft
Internal four square
(Option)

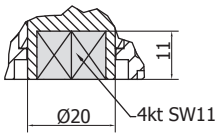

D shaft
(Option)

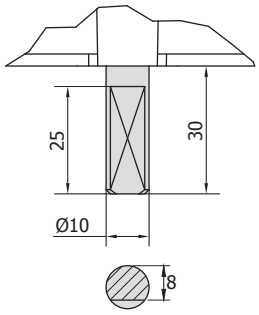

Round shaft
with feather key
(Option)

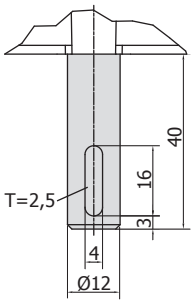

nano M

Type list

Type	AC Torque [Nm]	AC Time [s/90°]	Type	DC Torque [Nm]	DC Time [s/90°]
Nano M 30-06	30	6			
			Nano M-DC 30-07	30	6
			Nano M-DC 30-10	30	10
Nano M 30-12	30	12			
			Nano M-DC 30-15	30	15
Nano M 30-30	30	30	**Nano M-DC 30-30**	30	30
Nano M 30-60	30	60	**Nano M-DC 30-60**	30	60
			Nano M-DC 30-100	30	100
Nano M 30-120	30	120			
Nano M 40-09*	40	9			
			Nano M-DC 40-10	40	10
Nano M 40-12	40	12			
			Nano M-DC 40-15	40	15
Nano M 40-30	40	30	**Nano M-DC 40-30**	40	30
Nano M 40-60	40	60	**Nano M-DC 40-60**	40	60
			Nano M-DC 40-100	40	100
Nano M 40-120	40	120			
Nano M 50-20	50	20	**Nano M-DC 50-20**	50	20
			Nano M-DC 50-30	50	30
Nano M 50-50	50	50			
			Nano M-DC 50-60	50	60
Nano M 50-90	50	90			
			Nano M-DC 50-100	50	100
Nano M 50-180	50	180			
Nano M 60-20	60	20	**Nano M-DC 60-20**	60	20
			Nano M-DC 60-30	60	30
Nano M 60-50	60	50			
			Nano M-DC 60-60	60	60
Nano M 60-90	60	90			
			Nano M-DC 60-100	60	100
Nano M 60-180	60	180			

Other values upon request.

*** Travel 10°...100°**

Specifications

	AC	DC
Motor	Synchronous motor, short circuit-proof	Direct current brush motor
Protection class	IP 65 (optional IP 66)	
Ambient temperature	–15 °C...+60 °C/optional -40 °C...+80 °C (mit PMR: 0 °C...+60 °C)	
Housing	Alu die cast (EN AC-44200) untreated / Addition: Anodized aluminum	
Gear	Metal	
Cover	Polycarbonate	
Shaft	1.4021	
Position indicator	optional	
Power supply	230 V AC (optional 115 V AC/24 V AC)	24 V DC ±20%
Additional switches	2 pcs (optional)	
Potentiometer	optional	
Travel	30 bis 40 Nm: 10°...150° / 50 bis 60 Nm: 10°...100°	
Duty cycle	100%	
Connection	3 cable entries M16x1,5	
Path cutoff	Switch cams/Micro switches	
Maintenance	Lifetime lubrication (maintenance free)	
Control	3-point-step	2-wire-system

Dimensions

Nano M

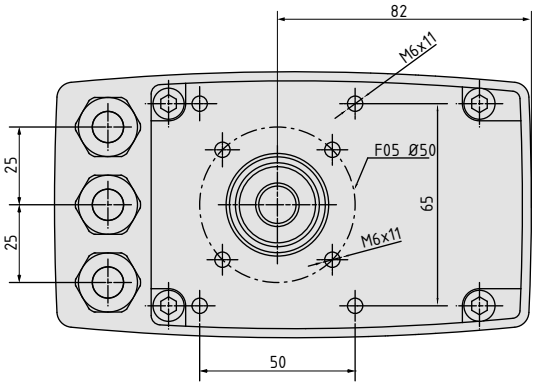

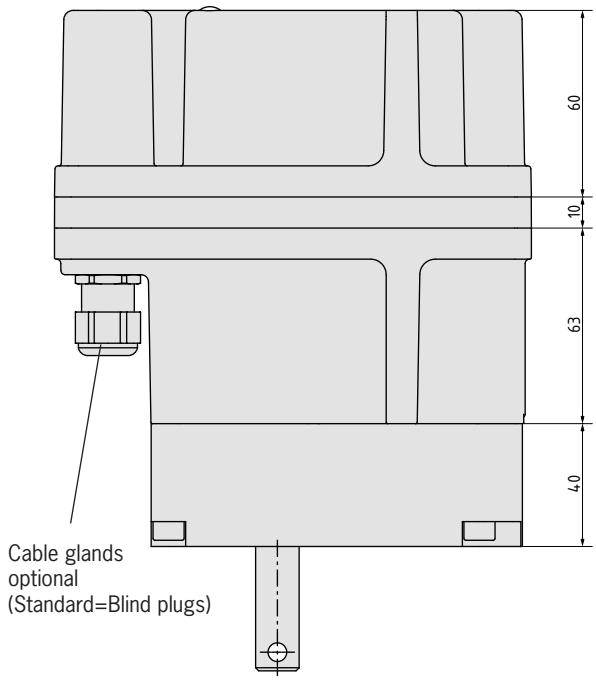

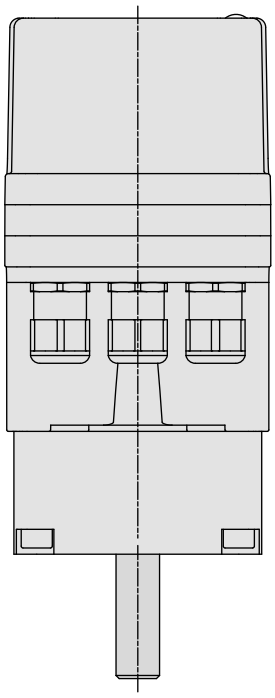

Round shaft
with cross hole
(Standard)

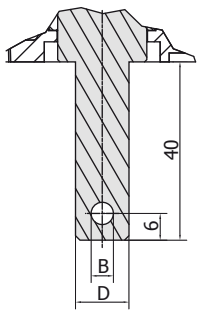

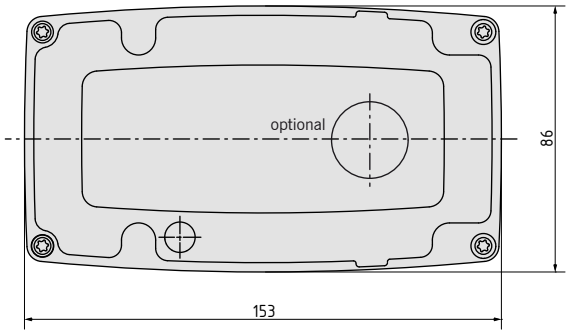

ISO shaft
Internal four square
(Option)

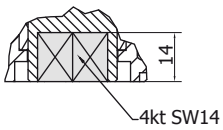

Round shaft
with feather key
(Option)

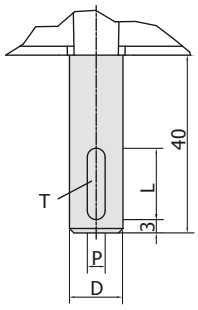

Type	D	B	L	P	T
30-40 Nm	12	5	16	4	2.5
50-60 Nm	14	6	22	5	3

AC

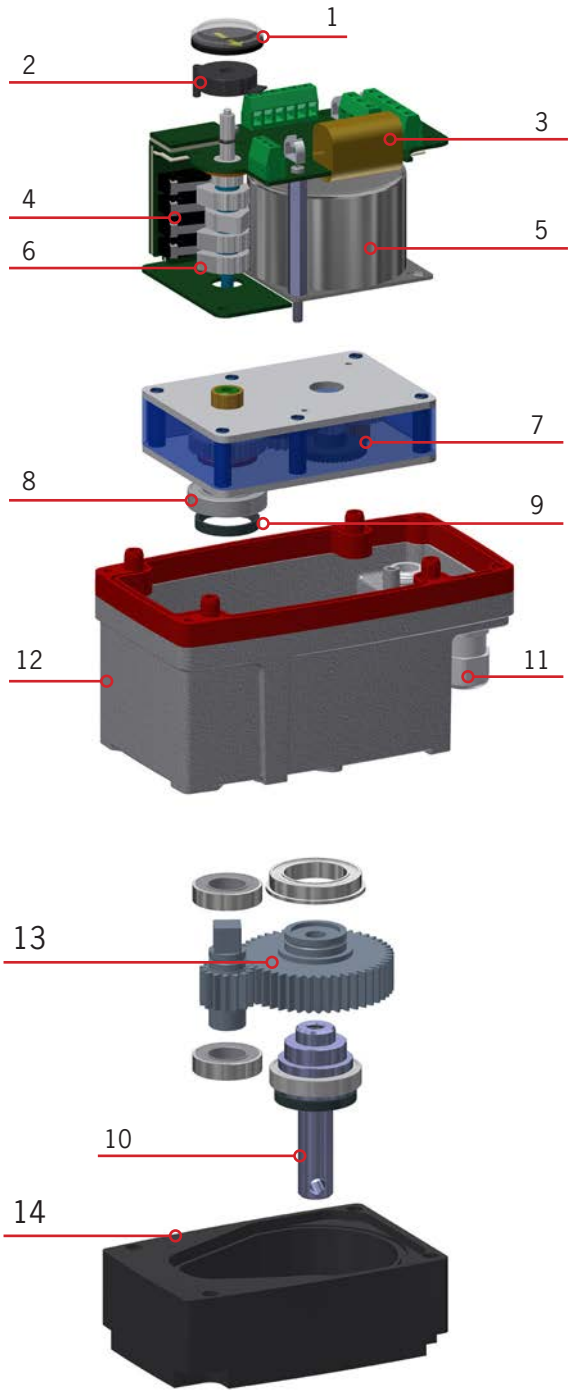

DC

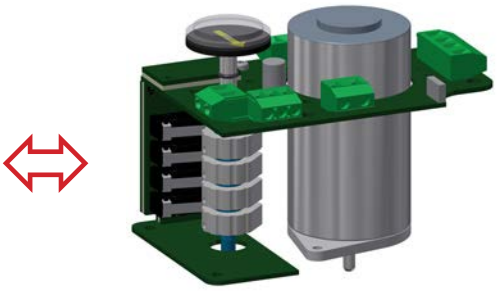

nano S

nano M

with additional gear

1	Position indicator (optional)	8	Ball bearing
2	Hollow shaft potentiometer	9	Shaft sealing (optional)
3	Motor capacitor	10	Shaft (S and M)
4	Limit switches	11	Cable entry (optional)
5	Synchronous motor	12	Alu die cast housing
6	Alu switch cams	13	Sub-mounted gear
7	Sandwich gear	14	Additional gear housing